Current part is item (20) on diagram. Available at www.oshkoshequipment.com

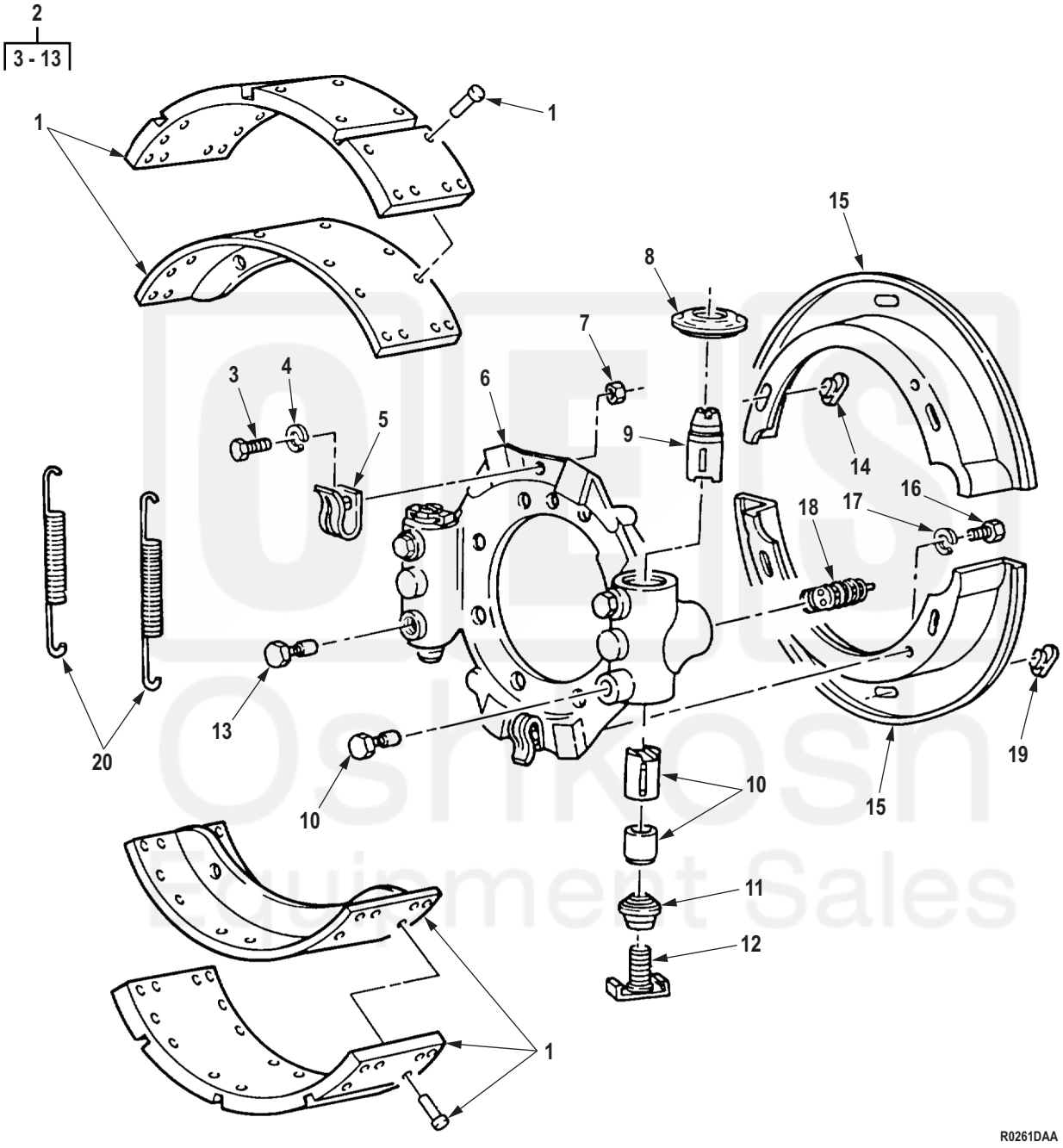

Figure 246. Rear Axle Brake and Spider Assembly.

Current part is item (20) on diagram. Available at www.oshkoshequipment.com

Current part is item (20) on diagram. Available at www.oshkoshequipment.com

(1) ITEM NO.	(2) SMR CODE	(3) NSN	(4) CAGEC	(5) PART NUMBER	(6) DESCRIPTION AND USABLE ON CODE (UOC)	(7) QTY
					GROUP 1202 SERVICE BRAKES.	
					FIG. 246. REAR AXLE BRAKE AND SPIDER ASSEMBLY.	
1	PAFZZ	2530-01-286-3257	19207	5705696	PARTS KIT,BRAKE SHO QTY-4 PER SET UOC: DAC,DAD,DAE,DAF,DAG,DAH,DAJ,DAL,DAW,DAX,V14,V15,V16,V17,V18,V19,V20,V21,V22,V24,ZAA,ZAB,ZAC,ZAD,ZAE,ZAF,ZAG,ZAH,ZAJ,ZAL	2
2	PAFFF	2530-01-125-4280	78500	A-3211-D-2994	SPIDER,BRAKE FWD REAR,R.H. AND REAR REAR, LH. UOC: DAC,DAD,DAE,DAF,DAG,DAH,DAJ,DAL,DAW,DAX,V14,V15,V16,V17,V18,V19,V20,V21,V22,V24,ZAA,ZAB,ZAC,ZAD,ZAE,ZAF,ZAG,ZAH,ZAJ,ZAL	2
2	PAFFF	2530-01-124-6530	78500	A-3211-K-2871	SPIDER,BRAKE FWD REAR,L.H. AND REAR REAR, R.H. UOC: DAC,DAD,DAE,DAF,DAG,DAH,DAJ,DAL,DAW,DAX,V14,V15,V16,V17,V18,V19,V20,V21,V22,V24,ZAA,ZAB,ZAC,ZAD,ZAE,ZAF,ZAG,ZAH,ZAJ,ZAL	1
3	PAFZZ	5306-01-062-3148	78500	S-146-C	. BOLT,MACHINE UOC: DAC,DAD,DAE,DAF,DAG,DAH,DAJ,DAL,DAW,DAX,V14,V15,V16,V18,V19,V20,V21,V22,V24,ZAA,ZAB,ZAC,ZAD,ZAE,ZAF,ZAG,ZAH,ZAJ,ZAL	2
4	PAFZZ	5310-01-063-2299	78500	WA142	. WASHER,LOCK UOC: DAC,DAD,DAE,DAF,DAG,DAH,DAJ,DAL,DAW,DAX,V14,V15,V16,V18,V19,V20,V21,V22,V24,ZAA,ZAB,ZAC,ZAD,ZAE,ZAF,ZAG,ZAH,ZAJ,ZAL	2
5	PAFZZ	5340-01-292-5552	78500	2257-M-1001	. CLIP,SPRING TENSION UOC: DAC,DAD,DAE,DAF,DAG,DAH,DAJ,DAL,DAW,DAX,V14,V15,V16,V18,V19,V20,V21,V22,V24,ZAA,ZAB,ZAC,ZAD,ZAE,ZAF,ZAG,ZAH,ZAJ,ZAL	2
6	PAFZZ	2590-01-168-7939	78500	A13-3211-K-2871	. BRAKE SPIDER AND CL FWD. REAR L.H. AND REAR REAR R.H. UOC: DAC,DAD,DAE,DAF,DAG,DAH,DAJ,DAL,DAW,DAX,V14,V15,V16,V17,V18,V19,V20,V21,V22,V24,ZAA,ZAB,ZAC,ZAD,ZAE,ZAF,ZAG,ZAH,ZAJ,ZAL	1

Current part is item (20) on diagram. Available at www.oshkoshequipment.com

Current part is item (20) on diagram. Available at www.oshkoshequipment.com

(1) ITEM NO.	(2) SMR CODE	(3) NSN	(4) CAGEC	(5) PART NUMBER	(6) DESCRIPTION AND USABLE ON CODE (UOC)	(7) QTY
6	PAFFF	2530-01-123-1229	78500	A1-3211-D-2994	. SPIDER,BRAKE FWD. REAR R.H. AND REAR REAR, L.H. UOC: DAC,DAD,DAE,DAF,DAG,DAH,DAJ,DAL,DAW,DAX,V14,V15,V16,V17,V18,V19,V20,V21,V22,V24,ZAA,ZAB,ZAC,ZAD,ZAE,ZAF,ZAG,ZAH,ZAJ,ZAL	1
7	PAFZZ	5310-01-237-2615	78500	N14C	. NUT,HEXAGON UOC: DAC,DAD,DAE,DAF,DAG,DAH,DAJ,DAL,DAW,DAX,V14,V15,V16,V17,V18,V19,V20,V21,V22,V24,ZAA,ZAB,ZAC,ZAD,ZAE,ZAF,ZAG,ZAH,ZAJ,ZAL	2
8	PAFZZ	5330-01-292-9573	78500	1205-B-2004	. SEAL,PLAIN ENCASED PART OF KIT P/N KIT1105B, PART OF KIT P/N 3202P8362, PART OF KIT P/N KIT 1174RH UOC: DAC,DAD,DAE,DAF,DAG,DAH,DAJ,DAL,DAW,DAX,V14,V15,V16,V17,V18,V19,V20,V21,V22,V24,ZAA,ZAB,ZAC,ZAD,ZAE,ZAF,ZAG,ZAH,ZAJ,ZAL	2
9	PAFZZ	5315-01-270-8268	3D6E9	2297-Y-5329	. PIN,GROOVED,HEADLES L.H. PART OF KIT P/N KIT1105B, PART OF KIT P/N 3202P8362 UOC: DAC,DAD,DAE,DAF,DAG,DAH,DAJ,DAL,DAW,DAX,V14,V15,V16,V17,V18,V19,V20,V21,V22,V24,ZAA,ZAB,ZAC,ZAD,ZAE,ZAF,ZAG,ZAH,ZAJ,ZAL	2
9	PAFZZ	5315-01-270-8269	3D6E9	2297-Z-5330	. PIN,GROOVED,HEADLES PART OF KIT P/N KIT1105B, PART OF KIT P/N KIT 1174RH UOC: DAC,DAD,DAE,DAF,DAG,DAH,DAJ,DAL,DAW,DAX,V14,V15,V16,V17,V18,V19,V20,V21,V22,V24,ZAA,ZAB,ZAC,ZAD,ZAE,ZAF,ZAG,ZAH,ZAJ,ZAL	2
10	PAFZZ	3040-01-280-4156	3D6E9	A-3280-V-8186	. PAWL PART OF KIT P/N KIT1105B, PART OF KIT P/N KIT1164 UOC: DAC,DAD,DAE,DAF,DAG,DAH,DAJ,DAL,DAW,DAX,V14,V15,V16,V17,V18,V19,V20,V21,V22,V24,ZAA,ZAB,ZAC,ZAD,ZAE,ZAF,ZAG,ZAH,ZAJ,ZAL	2

Current part is item (20) on diagram. Available at www.oshkoshequipment.com

Current part is item (20) on diagram. Available at www.oshkoshequipment.com

(1) ITEM NO.	(2) SMR CODE	(3) NSN	(4) CAGEC	(5) PART NUMBER	(6) DESCRIPTION AND USABLE ON CODE (UOC)	(7) QTY
11	PAFZZ	5330-01-271-9347	3D6E9	1205-C-2005	. SEAL,PLAIN ENCASED PART OF KIT P/N KIT1105B, PART OF KIT P/N KIT1164 UOC: DAC,DAD,DAE,DAF,DAG,DAH,DAJ,DAL,DAW,DAX,V14,V15,V16,V17,V18,V19,V20,V21,V22,V24,ZAA,ZAB,ZAC,ZAD,ZAE,ZAF,ZAG,ZAH,ZAJ,ZAL	2
12	KFFZZ	2530-01-271-7084	3D6E9	A-2297-V-5326	. ADJUSTING SCREW ASS PART OF KIT P/N KIT1105B, PART OF KIT P/N KIT1164 UOC: DAC,DAD,DAE,DAF,DAG,DAH,DAJ,DAL,DAW,DAX,V14,V15,V16,V17,V18,V19,V20,V21,V22,V24,ZAA,ZAB,ZAC,ZAD,ZAE,ZAF,ZAG,ZAH,ZAJ,ZAL	2
13	KFFZZ	2530-01-351-4061	78500	A1779M195	. GUIDE,PLUNGER PART OF KIT P/N KIT1105B, PART OF KIT P/N 3202P8362, PART OF KIT P/N KIT 1174RH UOC: DAC,DAD,DAE,DAF,DAG,DAH,DAJ,DAL,DAW,DAX,V14,V15,V16,V17,V18,V19,V20,V21,V22,V24,ZAA,ZAB,ZAC,ZAD,ZAE,ZAF,ZAG,ZAH,ZAJ,ZAL	2
14	PAFZZ	5340-00-181-1546	78500	1707C3	CAP-PLUG,PROTECTIVE UOC: DAC,DAD,DAE,DAF,DAG,DAH,DAJ,DAL,DAW,DAX,V14,V15,V16,V18,V19,V20,V21,V22,V24,ZAA,ZAB,ZAC,ZAD,ZAE,ZAF,ZAG,ZAH,ZAJ,ZAL	8
15	PAFZZ	2530-01-271-7075	78500	3264-A-1067	SHIELD,BRAKE DISK UOC: DAC,DAD,DAE,DAF,DAG,DAH,DAJ,DAL,DAW,DAX,V14,V15,V16,V18,V19,V20,V21,V22,V24	8
16	PAFZZ	5305-01-357-1656	3D6E9	S255Z	SCREW,CAP,HEXAGON H UOC: DAC,DAD,DAE,DAF,DAG,DAH,DAJ,DAL,DAW,DAX,V14,V15,V16,V17,V18,V19,V20,V21,V22,V24,ZAA,ZAB,ZAC,ZAD,ZAE,ZAF,ZAG,ZAH,ZAJ,ZAL	12
17	PAFZZ		78500	1229-S-513-C	WASHER,LOCK UOC: DAC,DAD,DAE,DAF,DAG,DAH,DAJ,DAL,DAW,DAX,V14,V15,V16,V18,V19,V20,V21,V22,V24,ZAA,ZAB,ZAC,ZAD,ZAE,ZAF,ZAG,ZAH,ZAJ,ZAL	12

Current part is item (20) on diagram. Available at www.oshkoshequipment.com

Current part is item (20) on diagram. Available at www.oshkoshequipment.com

(1) ITEM NO.	(2) SMR CODE	(3) NSN	(4) CAGEC	(5) PART NUMBER	(6) DESCRIPTION AND USABLE ON CODE (UOC)	(7) QTY
18	PAFZZ	2530-00-117-9144	60528	L-773	WEDGE ASSEMBLY PART OF KIT P/N KIT1105B UOC: DAC,DAD,DAE,DAF,DAG,DAH,DAJ,DAL,DAW,DAX,V14,V15,V16,V17,V18,V19,V20,V21,V22,V24,ZAA,ZAB,ZAC,ZAD,ZAE,ZAF,ZAG,ZAH,ZAJ,ZAL	8
19	PAFZZ	2530-00-406-6785	78500	1707B2	COVER,DUST UOC: DAC,DAD,DAE,DAF,DAG,DAH,DAJ,DAL,DAW,DAX,V14,V15,V16,V18,V19,V20,V21,V22,V24,ZAA,ZAB,ZAC,ZAD,ZAE,ZAF,ZAG,ZAH,ZAJ,ZAL	8
20	PAFZZ	5360-01-275-0545	78500	2258S1033	SPRING,HELICAL,EXTE PART OF KIT P/N KIT1105B, PART OF KIT P/N KIT1164 UOC: DAC,DAD,DAE,DAF,DAG,DAH,DAJ,DAL,DAW,DAX,V14,V15,V16,V18,V19,V20,V21,V22,V24,ZAA,ZAB,ZAC,ZAD,ZAE,ZAF,ZAG,ZAH,ZAJ,ZAL	2

END OF FIGURE

Current part is item (20) on diagram. Available at www.oshkoshequipment.com